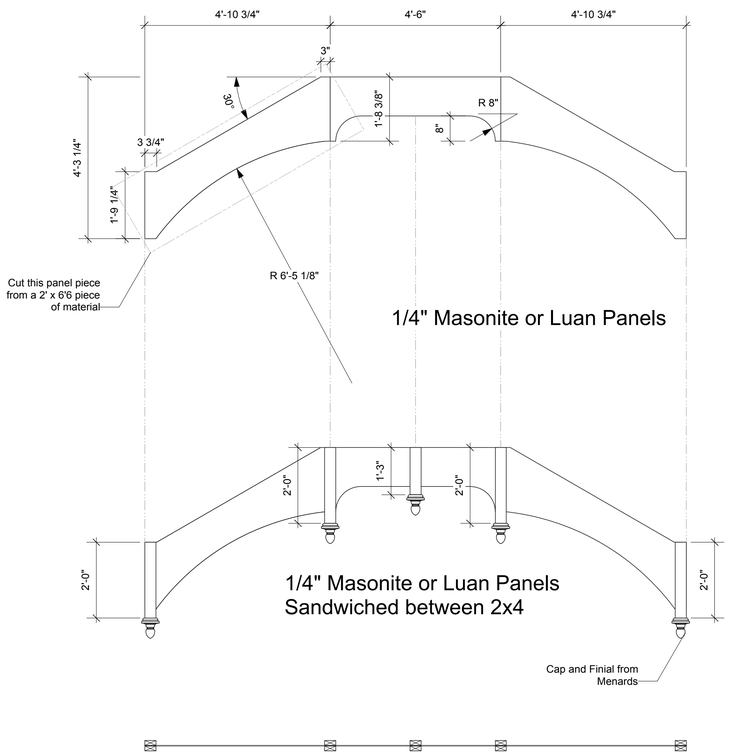

Top View

Arch Unit Hangs from pipe grid
6" downstage of back wall

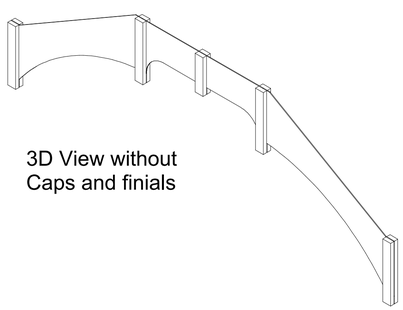

3D View without
Caps and finials

UPSTAGE UPPER ARCH

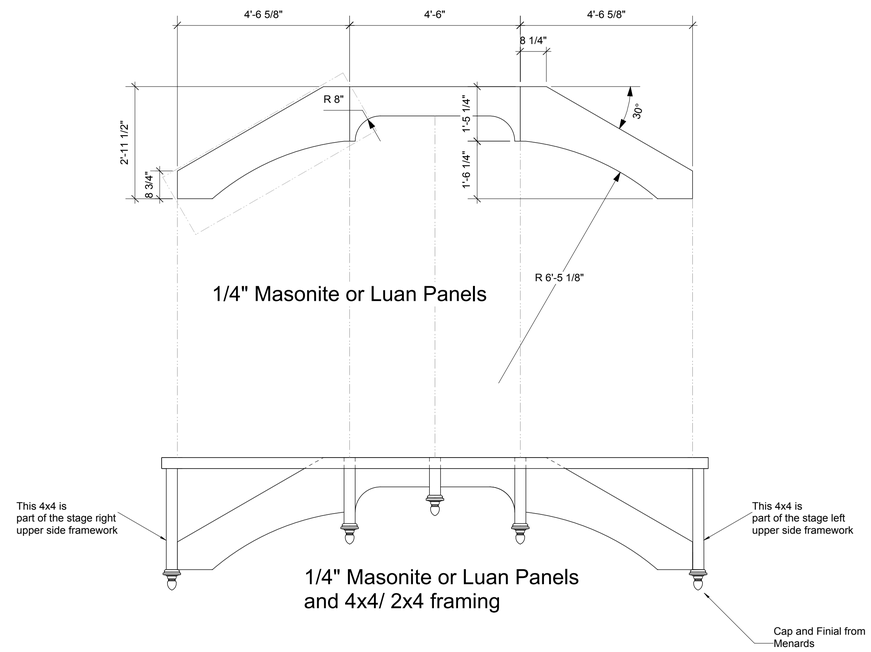

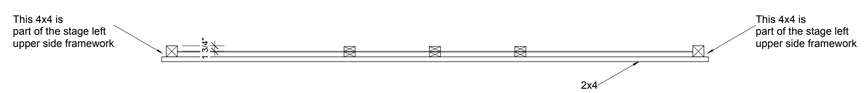

Top View

Unit Hangs from pipe grid

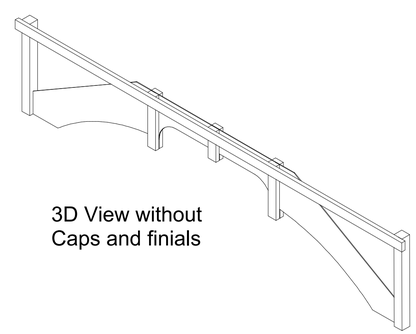

3D View without
Caps and finials

DOWNSTAGE UPPER ARCH

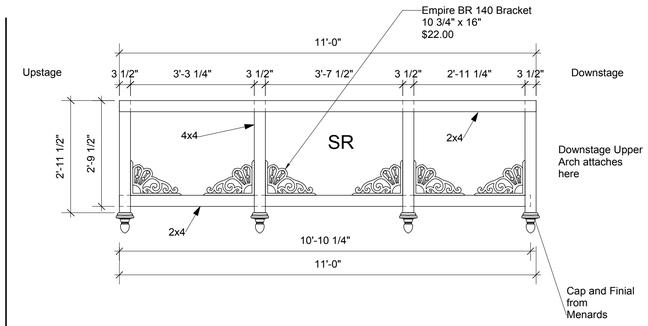

Unit Hangs from pipe grid

Top View

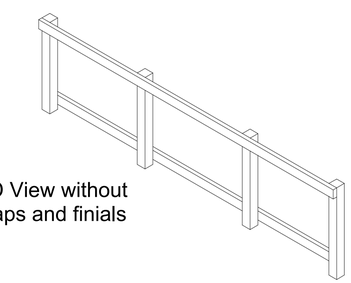

3D View without
Caps and finials

UPPER SIDE FRAMEWORK
STAGE RIGHT SHOWN
STAGE LEFT IS MIRROR IMAGE

Talley's Folly	
St. Olaf Haugen Theater	
Upper Side Panels & Upper Front Panels	
8/1/15 Scale: 1/2"=1' unless noted	4
B. Bjorklund 507 301 8860 Revision:	